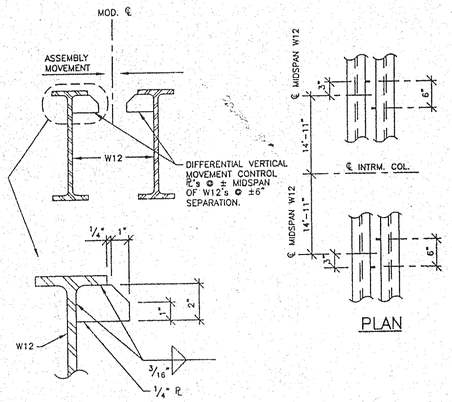

A / S8.2 ROOF DETAIL – MODULE LINE BM.'s VERTICAL CONTROL ℞'s
SCALE: 1 1/2"=1'-0"

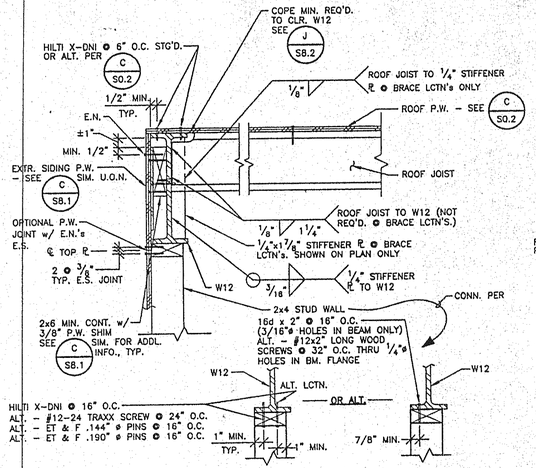

NOTE: PROVIDE A FASTENER 8" MAX. FOR EA. END OF EA. TOP ℞ PC. AND 2 FASTENERS MIN. PER EA. PC.

B / S8.2 ROOF DETAIL – TYP. @ SIDEWALL
SCALE: 1 1/2"=1'-0"

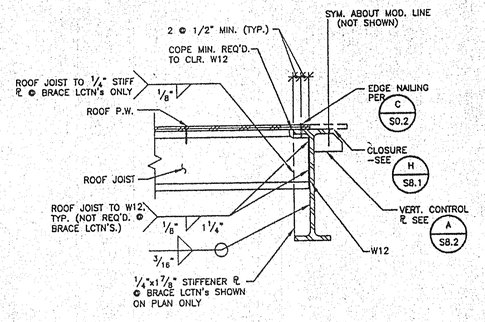

C / S8.2 ROOF DETAIL – TYP. @ MODULE LINE
SCALE: 1 1/2"=1'-0"

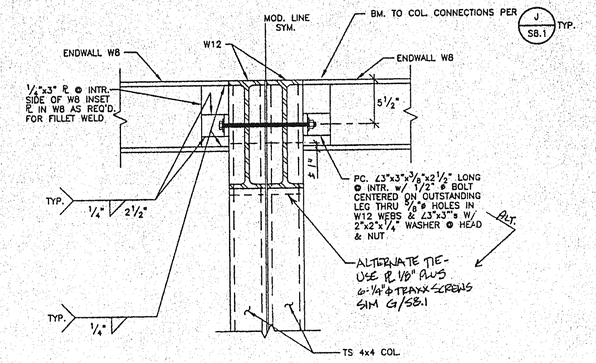

D / S8.2 TYP. DET. @ ROOF-FRONT & REAR ENDWALL WALL TIE @ MOD. LINE
SCALE: 1 1/2"=1'-0"

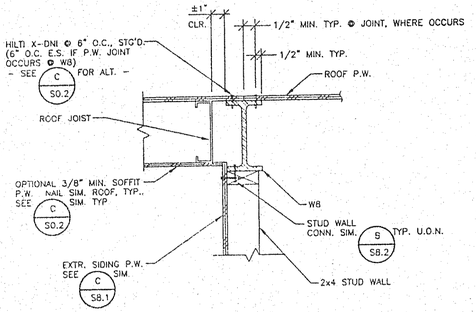

E / S8.2 ROOF DETAIL – TYP. @ ENDWALLS
SCALE: 1 1/2"=1'-0"

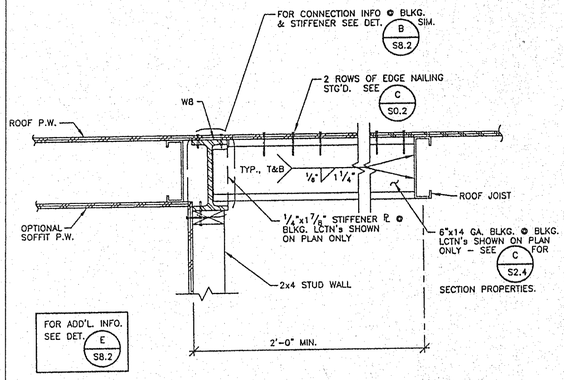

F / S8.2 ROOF DETAIL–BLKG. @ ENDWALL BEAM
SCALE: 1 1/2"=1'-0" (TYP. @ FRONT & REAR)

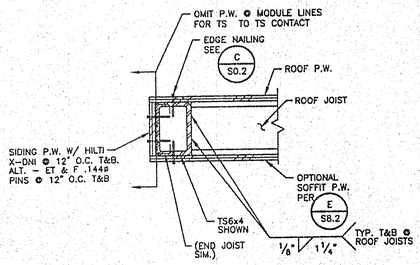

G / S8.2 ROOF DETAIL – @ FRONT & REAR EAVES
SCALE: 1 1/2"=1'-0"

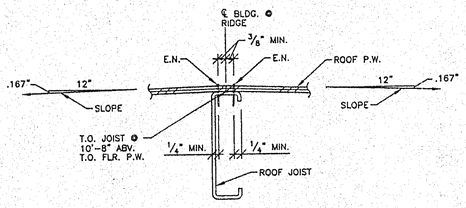

H / S8.2 DETAIL – ROOF P.W. @ RIDGE JOIST
SCALE: 1 1/2"=1'-0"

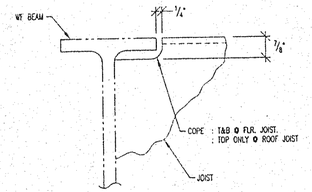

J / S8.2 TYPICAL COPE OF ROOF/FLR. JOIST @ W8 OR W12 BEAMS
SCALE: 1/2"=1'-0"

REVISIONS	BY

PACESETTER INDUSTRIES, INC.

P.O. BOX 1131, MODESTO, CA 95353 (209) 521-1600

24x60 RELOCATABLE BUILDING

ROOF DETAILS

REGISTERED PROFESSIONAL ENGINEER BRUCE D. DOIG No. 2522 STRUCTURAL STATE OF CALIFORNIA

EXPIRES 3-31-00

LICENSED ARCHITECT HARMAN A. BEGER C-23916 STATE OF CALIFORNIA

ANDERSON & DOIG STRUCTURAL ENGINEERS
A CALIFORNIA CORPORATION
9110A FLACTR LANE, STE. 100, SACRAMENTO, CA 95827-2311
(916) 366-9221 FAX (916) 366-9223

DRAWN	JR
CHECKED	BD/PLS
DATE	6-11-97
SCALE	AS NOTED
JOB NO.	97015 2460
SHEET	S8.2
OF	20 SHEETS

OFFICE OF STATE ARCHITECT
PROJECT REVIEW
AC ___ FLS ___ SS ___
DATE 7/14/97

IDENTIFICATION STAMP
DIV. OF THE STATE ARCHITECT
OFFICE OF REGULATION SERVICES
PC-336
AC ___ FLS ___ SS ___
DATE: 7-11-97

24'x60' BLDG.

DESIGN (1995 CBC)			
ROOF LIVE LOAD	= 20	PSF	(HORIZ)
FLOOR LIVE LOAD	= 50	PSF	
WIND	= 75	MPH	EXP C
SEISMIC ZONE	= 4		