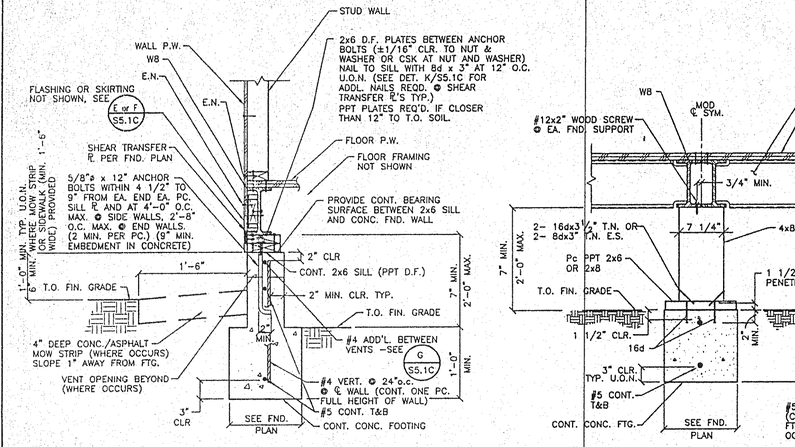

A S5.1C TYP. CONT. FTG. & WALL @ SIDE & END WALLS

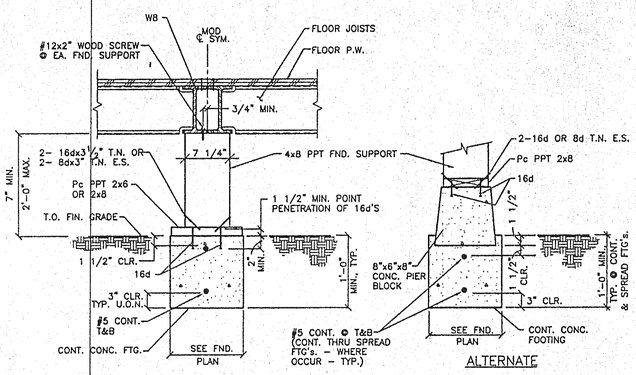

B S5.1C DET.-FND. & SUPPORTS @ MOD. CENTERLINE

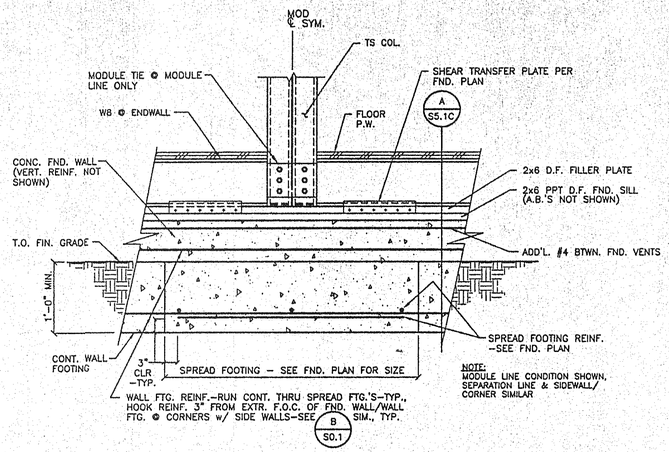

C S5.1C DETAIL - SPREAD FOOTING @ END WALLS (SIM. @ SIDEWALL/CORNER)

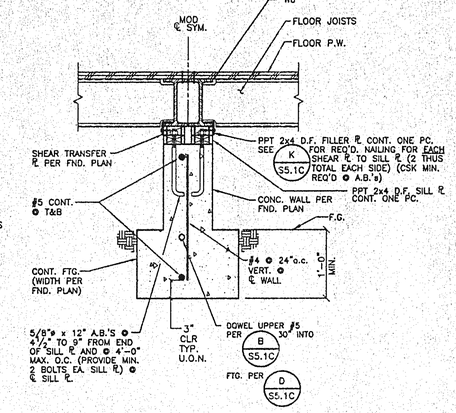

D S5.1C DET.-CONC. WALL & FTG. @ MOD. LINE

SCALE: 1" = 1'-0"

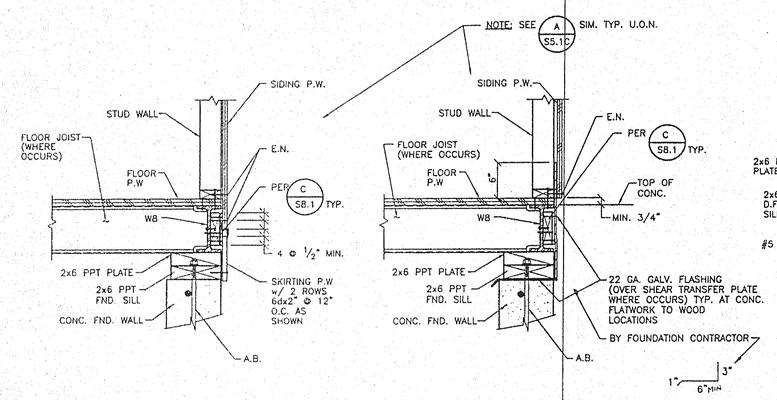

E S5.1C DET.- TYPICAL SKIRTING (TYPICAL U.O.N. @ BLDG PERIMETER-SEE F S5.1C)

F S5.1C DET.- TYPICAL FLASHING (TYPICAL @ LOCATIONS w/ EXTERIOR CONCRETE ADJ. BUILDING-SEE ARCH. DRWGS. FOR LOCATIONS, TYP.)

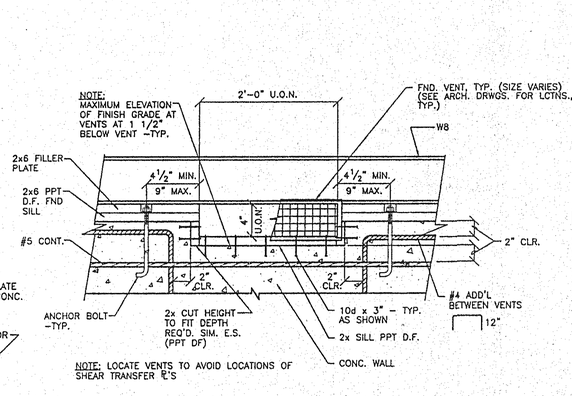

G S5.1C TYP. DET.- FOUNDATION VENT

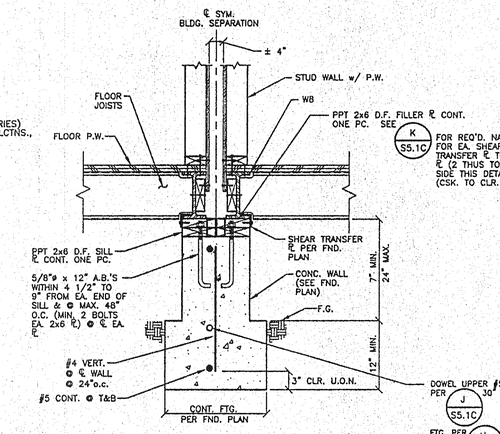

H S5.1C CONC. WALL & FTG. @ BLDG. SEPARATION LINE

SCALE: 1" = 1'-0"

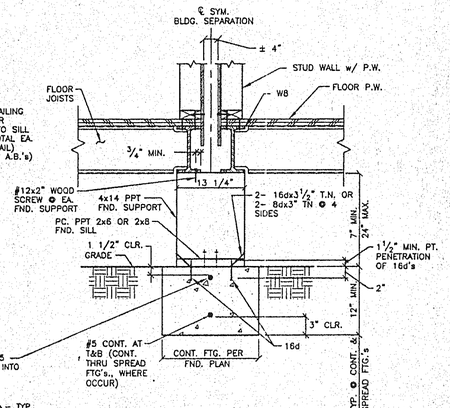

J S5.1C FND. & SUPPORTS @ BLDG. SEPARATION LINE

SCALE: 1" = 1'-0"

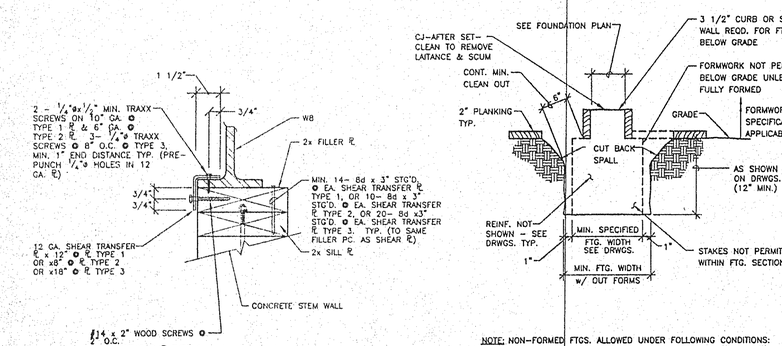

K S5.1C SHEAR TRANSFER ℄ @ CONC. FND.

L S5.1C TYP. NON-FORMED FTG. DETAIL

N.T.S.

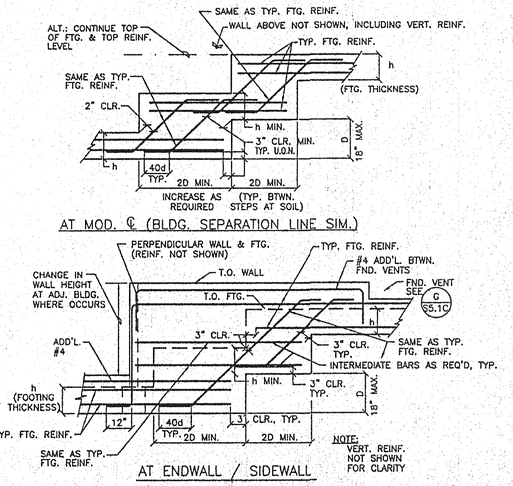

M S5.1C TYP. STEP FOOTING DETAIL

(02/04/92)

REVISIONS	BY

PACESETTER INDUSTRIES, INC.

P.O. BOX 1131, MODESTO, CA 95353 (209) 521-1600

24x60 RELOCATABLE BUILDING

CONCRETE FOUNDATION DETAILS

REGISTERED PROFESSIONAL ENGINEER BRUCE D. DOIG No. 2522 STRUCTURAL STATE OF CALIFORNIA

EXPIRES 3-31-00

LICENSED ARCHITECT NORMAN A. DEGER C-23016 RENEWAL DATE STATE OF CALIFORNIA

10-17

ANDERSON & DOIG
STRUCTURAL ENGINEERS
A CALIFORNIA CORPORATION
10348 PLACER LANE, STE 100, SACRAMENTO, CA 95827
(916) 366-9622 (FAX (916) 366-9623)

DRAWN	JR
CHECKED	BD/PLS
DATE	6-11-97
SCALE	AS NOTED
JOB NO.	97015 2460
SHEET	S5.1C

IDENTIFICATION STAMP
DIV. OF THE STATE ARCHITECT
OFFICE OF REGULATION SERVICES
PC-336
DATE: 6-11-97

24'x60' BLDG.

DESIGN (1995 CBC)			
ROOF LIVE LOAD	=	20	PSF (SNOW)
FLOOR LIVE LOAD	=	50	PSF
WIND	=	75	MPH EXP C
SEISMIC ZONE	=	4	