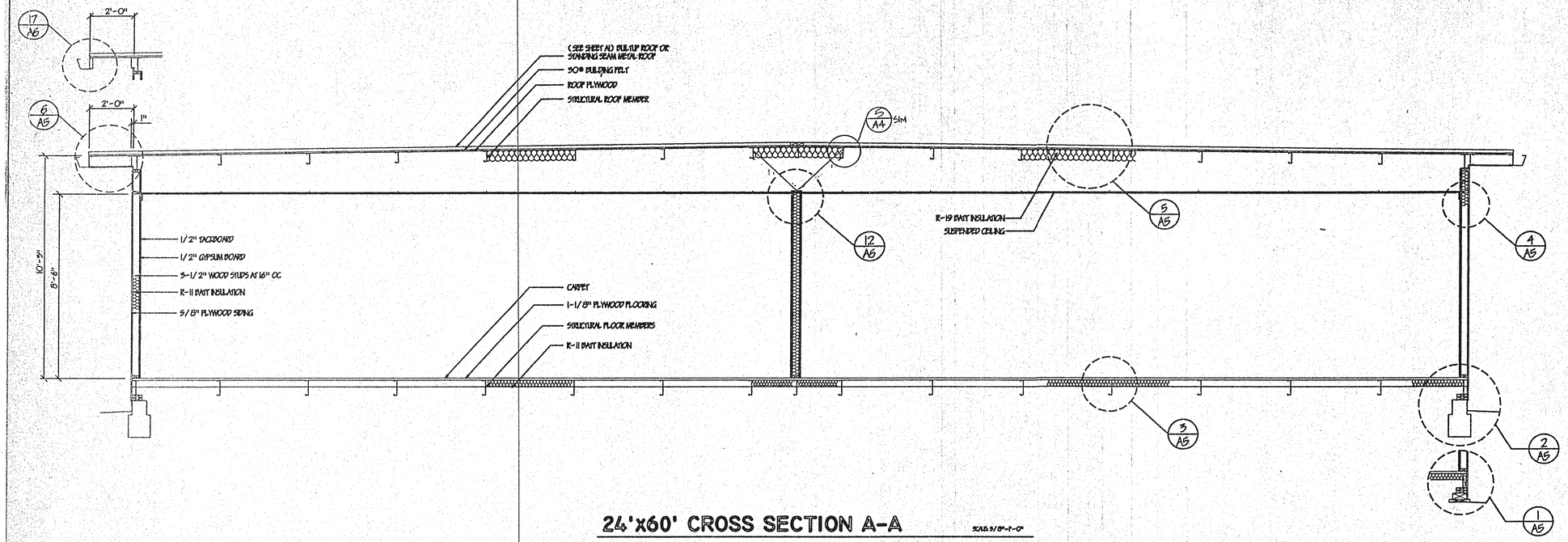

24'x60' CROSS SECTION A-A

SCALE: 1/8"=1'-0"

GENERAL NOTES

ALL FINISHES SHALL COMPLY WITH CBC CHAPTERS 3, 6, 7, 8, AND 10

ABBREVIATIONS:

HM	HOLLOW METAL
AL OR ALUM	ALUMINUM
NR	NOT RATED
NO.	NUMBER
MIN.	MINIMUM
MAX.	MAXIMUM
AFF	ABOVE FINISH FLOOR
OVHG	OVERHANG
PR	PAIR
FNDN	FOUNDATION
STRUCT	STRUCTURAL
PPT	PRESSURE TREATED

NORMAN A. GEIGER
AIA, CSI, CDT, ICBO
P.O. BOX 41064
Sacramento, CA 95841
(916) 332-2453 FAX
(916) 332-2453 PHONE
GEIGER GRAFICS ARCHITECTURAL SERVICES

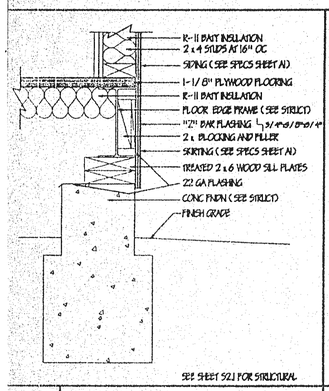

2 CONC FNDN SCALE: 1-1/2"=1'-0"

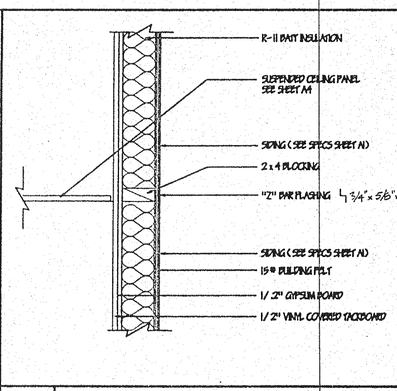

4 "Z" BAR FLASHING SCALE: 1-1/2"=1'-0"

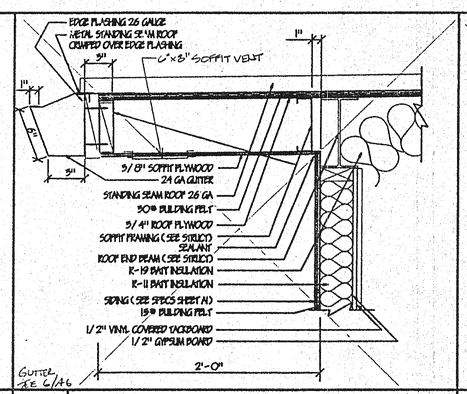

6 SOFFIT OVERHANG SCALE: 1-1/2"=1'-0"

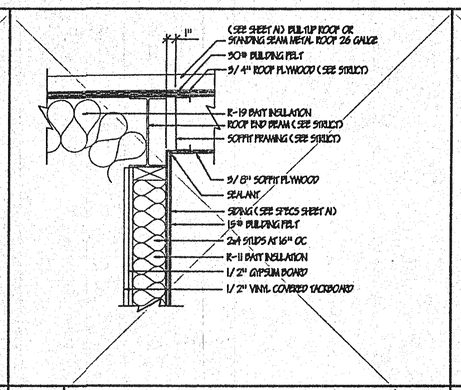

8 SOFFIT OVERHANG SCALE: 1-1/2"=1'-0"

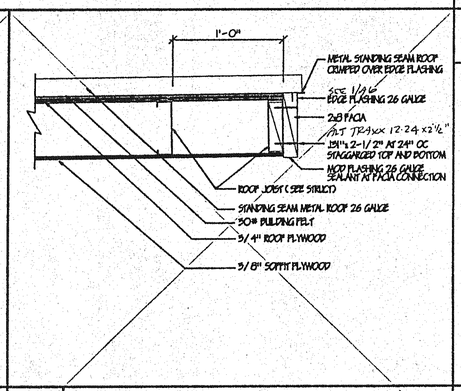

10 SOFFIT OVERHANG SCALE: 1-1/2"=1'-0"

LEGEND

- BATT INSULATION
- WOOD MEMBER
- BLOCKING
- GYPSUM BOARD
- PLYWOOD

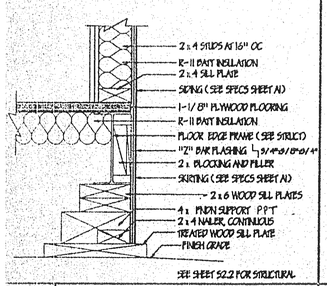

1 WOOD FNDN SCALE: 1-1/2"=1'-0"

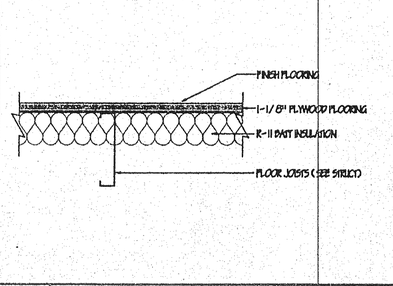

3 FLOOR SCALE: 1-1/2"=1'-0"

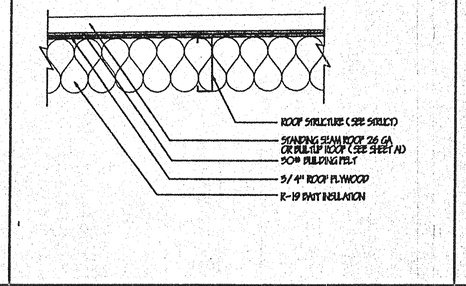

5 ROOF SCALE: 1-1/2"=1'-0"

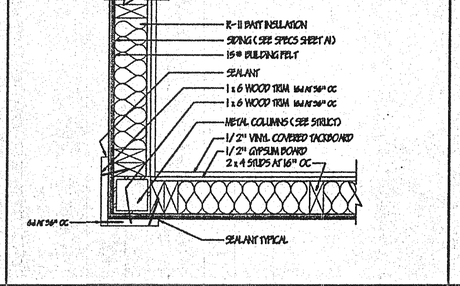

7 BUILDING CORNER SCALE: 1-1/2"=1'-0"

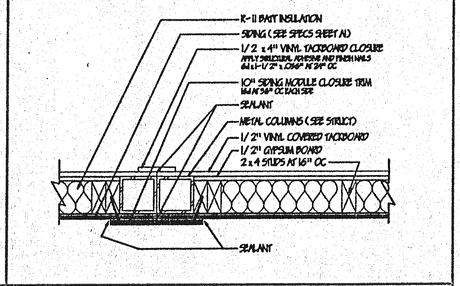

9 MOD CONNECTION SCALE: 1-1/2"=1'-0"

APPROVALS

DIVISION OF STATE ARCHITECT
APPROVED PLANS
JUN 08 97
DATE 7/14/97

IDENTIFICATION STAMP
DIV. OF THE STATE ARCHITECT
OFFICE OF REGULATION SERVICES
PC-336
AD. PLD. SD.
DATE

PACESETTER INDUSTRIES, INC.
P.O. BOX 1131, MODESTO, CA 95353 (209) 521-1600

24x60 RELOCATABLE BUILDING

SHEET CONTENTS:
GENERAL NOTES
KEYNOTES
BUILDING SECTION
DETAILS

DATE:	JUNE 9, 1997
REV.:	
DRAWING SCALE:	AS SHOWN
PROJECT NUMBER:	97-09
SHEET	A5

COMPUTER SCALE: 3/16"=1'-0"
PACESETTER 24X60 / 10 DWG